USLED
Always the Right Choice!

Project	Date

Catalog Number	Type

EcoNight®4

Outdoor LED Full Cutoff Wall Pack



Product Performance Summary

Lumen Output	**Up to 12,375 lumens**
Efficacy	**Up to 174 LPW**
CRI	**≥ 70 CRI**
Available CCT	**3000K / 4000K / 5000K**
Warranty	**Ten-Year Warranty**

Product Overview

Introducing the EcoNight®4 – the next evolution in US LED's energy-efficient wall pack lighting. Designed to replace legacy HID wall packs, the EcoNight®4 offers a full-cutoff design engineered to meet the demands of restrictive lighting zones, eliminating forward/upward light and minimizing light pollution. This cutting-edge LED wall pack guarantees durability and longevity, ensuring steadfast performance even in the harshest conditions. Say goodbye to frequent replacements, as the EcoNight®4 promises ultra-long-life operation, providing sustainable and brilliant lighting for many years.

Key Features

- Low-wattage, highly-efficient patented LED replacement for legacy HID wall packs.
- Full cutoff design for restrictive lighting zones to eliminate forward/upward light.
- Robust die-cast housing is IP65-rated to protect integral components from harsh environments.

Electrical

- 120-277VAC 0-10V dimming standard.
- System power factor >90% and THD <20%.
- Operating temperature: -40°C to 45°C (-40°F to 113°F).

Mounting

- Designed for wall mounting above four feet from the ground.
- Housing is configured for mounting directly over a standard 4" outlet box (by others) or surface wiring via any of the convenient 1/2" threaded conduit entries.

Construction

- Two-piece die-cast aluminum housing optimizes thermal management (IP65 Rated).
- Housing is protected by a RoHS compliant, corrosion resistant powder coat finish.
- Standard architectural bronze finish. Consult factory for custom color options.
- Clear tempered glass lens.

Optics

- Industry-leading LEDs with 3000K, 4000K and 5000K CCT (minimum 70 CRI).
- IES Type III short distribution.
- Lumen Maintenance: ≥167,000 hours (L70). [1]

Warranty

- Backed by US LED's industry-leading Ten-Year Warranty.

Product Applications

- Self-Storage Facilities
- Educational Facilities
- Business Campuses
- Industrial Facilities
- Mall/Retail Areas
- Building Exteriors
- Security Lighting
- Parking Lots

Product Certifications

- UL Listed
- DLC Premium Listed
- Complies with UL1598 and CSA C22.2
- Suitable for Wet Locations
- IP65 Rated Enclosure
- RoHS Compliant

Ordering Information

Example: ULFC1-1-UNVL-50-40-BZ

ULFC1					
Series	**Variant**	**Input Voltage**	**CCT**	**Wattage**	**Finish**
	1 Standard	**UNVL** 120-277V	**30** 3000K	**24** 24W	**BZ** Bronze
			40 4000K	**32** 32W	**W** White [2]
			50 5000K	**40** 40W	**C** Custom [2]
				45 45W	
				60 60W	
				75 75W	

Accessories
BB Remote Battery Back-Up
C Casambi Enabled
IB Integrated Battery Back-Up
MS Motion Sensor
PC Photocell

1. US LED product 'Lifetimes' refer only to the LED light engine, not the power source, and are based on the Illuminating Engineering Society's TM21 Projected Lumen Maintenance methodology at a 25° C / 77° F ambient temperature. The lifetimes are solely meant to be a guide for expected LED degradation and not a warranty or predictive of their actual life, which can be affected by ambient temperatures and other factors.
2. Custom colors available upon request. Pleas consult and specify color with the factory.

EcoNight®4

Outdoor LED Full Cutoff Wall Pack

USLED
Always the Right Choice!

Dimensions

Net Weight
9.35 lbs. (4.24kg)

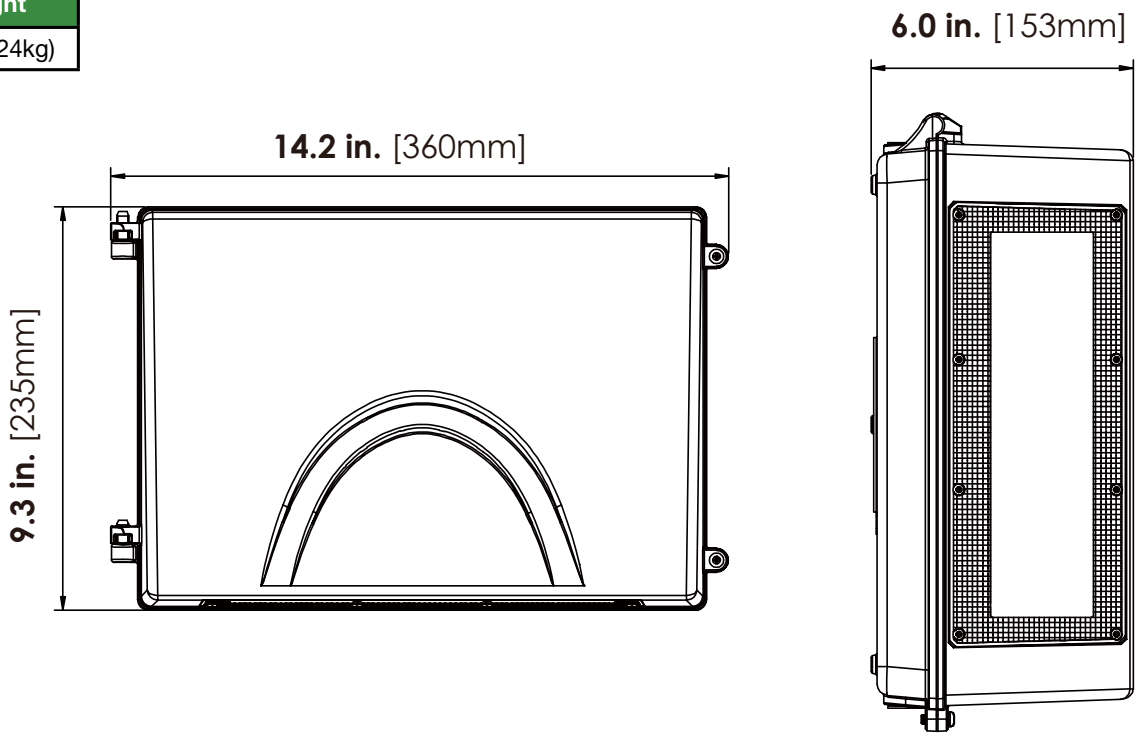

Performance Data

All photometric testing performed to IESNA LM-79 standards by an accredited testing facility.
For photometric data details, please visit www.usled.com or consult the factory directly.

Model	Available CCT	Wattage	Delivered Lumens	Efficacy	BUG Rating	L70 Calculated Life
ULFC1-1-UNVL-XX-24-XX	3000K/4000K/5000K	23W	4,025	174 LPW	B1-U2-G1	≥167,000 Hours
ULFC1-1-UNVL-XX-32-XX	3000K/4000K/5000K	31W	5,394	171 LPW	B1-U2-G1	≥167,000 Hours
ULFC1-1-UNVL-XX-40-XX	3000K/4000K/5000K	39W	6,634	168 LPW	B2-U2-G1	≥167,000 Hours
ULFC1-1-UNVL-XX-45-XX	3000K/4000K/5000K	47W	7,933	168 LPW	B2-U3-G1	≥167,000 Hours
ULFC1-1-UNVL-XX-60-XX	3000K/4000K/5000K	62W	10,308	166 LPW	B2-U3-G1	≥167,000 Hours
ULFC1-1-UNVL-XX-75-XX	3000K/4000K/5000K	75W	12,375	165 LPW	B2-U3-G2	≥167,000 Hours

EcoNight®4

Outdoor LED Full Cutoff Wall Pack

USLED
Always the Right Choice!

Accessories



Remote Emergency Battery Back-Up
[Option BB]

Key Features & Overview

- Meets all NEC, IBC, and Life Safety Code Emergency Lighting Requirements; self-testing feature.
- Suitable for use in plenum or damp locations.
- Constant wattage delivery maintains illumination for the full emergency runtime with no degradation.
- Five-Year warranty.

UL Listed remote LED emergency driver that allows one luminaire to operate in both normal and emergency modes. During a power failure, the battery back-up engages and powers the luminaire for 90 minutes.

Rated Input Voltage	100-347VAC, 50/60Hz
Input Current	≤100mA Max
Input Power	12W Max
Output Voltage Range	170V DC
Output Power	6-25W
Recharge Time	24 Hours
Discharge Time	90 Minutes
Ambient Temp. Rating	0°C to 50°C (32°F to 122°F)

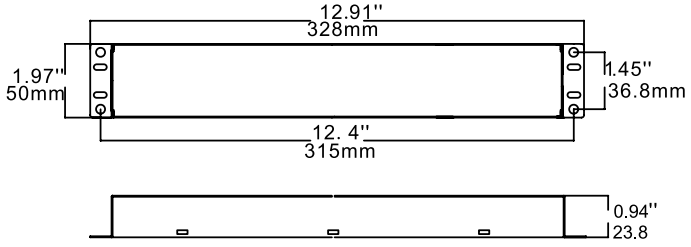

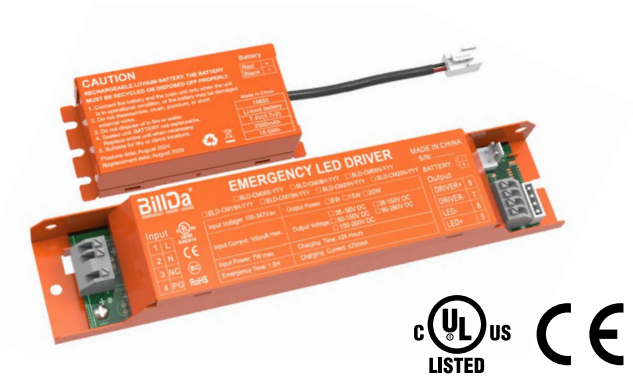

Integrated Emergency Battery Back-Up
[Option IB]

Key Features & Overview

- Split design, external battery for flexible installation and narrow space.
- Long-life high temperature recyclable Li-ion battery, meets 500 cycles of charge and discharge.
- Includes 2-in-1 test switch and charge indicator light.
- Five-Year warranty.

UL Listed integrated LED emergency driver that allows one luminaire to operate in both normal and emergency modes. During a power failure, the battery back-up engages and powers the luminaire for 90 minutes.

Rated Input Voltage	100-347VAC, 50/60Hz
Input Current	≤100mA Max
Input Power	7W Max
Output Voltage Range	36-150V DC
Output Power	8-20W
Recharge Time	24 Hours
Discharge Time	90 Minutes
Ambient Temp. Rating	5°C to 50°C (41°F to 122°F)

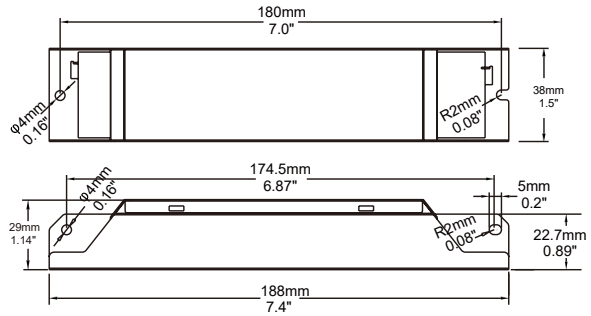

EcoNight®4

Outdoor LED Full Cutoff Wall Pack

USLED
Always the Right Choice!

Accessories



RoHS COMPLIANT

Microwave Motion Sensor & Adjustable Arm

[Option MS] HAISEN HD07VR-MH

Key Features

- Microwave motion sensor - 12VDC input range; IP65.
- Mounted externally by adjustable receptacle arm.
- Bi-level dimming, daylight threshold, dusk/dawn functions.
- Default settings - Detection area: 100%, Hold time: 5s, Daylight Threshold: disabled, Standby Period: 0s, Standby Dimming Level: 10%

Operating Voltage	12VDC
Operating Current	≥30mA
Output	DIM 0-10V
Stand-By Power	<0.5W
Detection Area	25%/50%/75%/100%
Hold Time	5s/30s/1min/3min/5min/10min 20min/30min
Daylight Threshold	Disable/2Lux/10Lux/30Lux 50Lux/100Lux
Stand-By Time	0s/10s/1min/5min/10min 30min/60min+∞
Stand-By Dimming Level	10%/20%/30%/50%
Microwave Power	<0.3mW
Detection Distance	≥9ft.
Max Installation Height	39ft.
Operating Temperature	-20°C to 60°C (-4°F to 140°F)

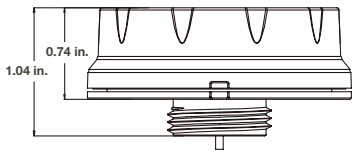

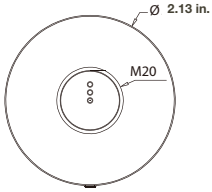



c UL us LISTED

RoHS

Electronic Photocell 120-277VAC

[Option PC]

Key Features & Overview

- Installed internally (no external mounting required).
- Non-drift silicon light sensor with IR filter.
- DC relay with zero-crossing circuitry for extended life.

The electronic photocontrol accessory is perfect for simplified outdoor lighting control, providing ON/OFF function in accordance with the ambient lighting level.

Sensor Time Delay	Instant ON; 3-10 sec OFF
Photocell Type	Silicon Diode
Photo Control Switch Type	Relay
Power Consumption	0.4W Max
Activation On	10~20Lx
Activation Off	30~80Lx
Dimensions	2.25” (H) x 1.14” (W) X 1.73” (D)
Operation Temperature	-40°C to 70°C (-40°F to 158°F)

Due to continued product improvements, product specifications are subject to change without notice. Please visit www.usled.com for the most updated product specifications.