Project	Date

Catalog Number	Type

ExsaBay® Infinity

Round LED High Bay With Selectable CCT & Wattage

Product Performance Summary

Lumen Output	Up to 34,487 lumens
Efficacy	Up to 145.2 LPW
CRI	≥ 80 CRI
Available CCT	Selectable CCT: 4000K & 5000K
Warranty	Ten-Year Warranty

Product Overview

The ExsaBay Infinity LED round high bay (EBI2) is the premier choice over traditional HID and fluorescent lighting systems. It maintains exceptional light levels, is highly durable, and can withstand moisture and other contaminants throughout its ultra-long lifetime. Moreover, the EBI2 is a simple one-for-one high bay retrofit solution for applications requiring a round aesthetic and uniform coverage. The ExsaBay Infinity runs circles around the competition and will showcase your property in the best light possible.

Key Features

- Energy-efficient LED high bay solution to replace legacy fluorescent or HID systems.
- Compact design that integrates the driver into the housing for a streamlined aesthetic.
- Optional microwave/daylight harvesting sensor accessory available.

Electrical

- Voltage: 120-277V; 0-10V dimming standard.
- Surge Protection: Up to 6kV/3kA standard.
- Power Factor: ≥90%; THD: <20%
- Standard 6' black power/dimmer cord included.
- Standard sensor receptacle included.
- Operating temperature: -40°C to +50°C (-40°F to +122°F)

Mounting

- Eye hook mount standard for suspended installation with chain (by others).
- Surface mount bracket and 3/4" NPT adapters are available (sold separately).

Construction

- Die-cast aluminum housing engineered to optimize thermal management and accelerate heat dissipation.
- Housing is pre-painted with standard black or white corrosion-resistant powder coat finish.
- Polycarbonate lens protects LEDs.

Optics

- Industry-leading LEDs 4000K or 5000K CCT (≥80 CRI). ≥90 CRI available (consult factory).
- 90° beam angle.
- Lumen maintenance: 149,000 hours (L70) [1]
- Clear polycarbonate reflector accessory available (sold separately).

Warranty

- Backed by US LED's Industry-Leading Ten-Year Warranty.

Product Applications

- Retail Stores
- Warehouses
- Storage Facilities
- Industrial Facilities
- Manufacturing Facilities
- Gymnasiums
- Airport Hangars
- Commercial Buildings

Product Certifications

- UL Listed for US & Canada
- Complies with UL 1598 and CSA 22.2
- IP65 Rated; Suitable for Wet Locations
- RoHS Compliant

Ordering Information

Example: EBI2-1-UNVL-90-SCCT-E-BK-N

EBI2							
Series	**Variant**	**Input Voltage**	**Optic**	**Selectable CCT**	**Selectable Wattage**	**Finish**	**Sensor**
	1 Standard	**UNVL** 120-277V	**90** 90°	**SCCT** Selectable CCT: 4000K & 5000K	**D** 75W, 100W, 150W **E** 150W, 200W, 240W	**BK** Black **WH** White	**Y** Microwave Sensor **D** Daylight Harvesting Sensor **N** None

Accessories	
BLD-RM40R-YYY	Battery Back-Up
EBI2-CLR	Clear Reflector (PC)
EBI2-SM	Surface Mount Bracket
EBI2-34A	M10 to ¾" NPT Adapter
EBI2-34JB	M10 to 3/4" NPT Adapter with J-Box
EBI2-WG1	Wire Guard (75-150W)
EBI2-WG2	Wire Guard (150-240W)
RC-100	Sensor Remote Control *(Required For Daylight Harvesting Function)*

1. US LED product 'Lifetimes' refer only to the LED light engine, not the power source, and are based on the Illuminating Engineering Society's TM21 Projected Lumen Maintenance methodology at a 25° C / 77° F ambient temperature. The lifetimes are solely meant to be a guide for expected LED degradation and not a warranty or predictive of their actual life, which can be affected by ambient temperatures and other factors.

ExsaBay® Infinity

Round LED High Bay With Selectable CCT & Wattage

USLED
Always the Right Choice!

Dimensions

Model	Net Weight
75W/100W/150W - Standard	4.6 lbs. (2.1kg)
75W/100W/150W - Surface Mount	5.5 lbs. (2.5kg)

Model	Net Weight
150W/200W/240W - Standard	5.4 lbs. (2.4kg)
150W/200W/240W - Surface Mount	6.3 lbs. (2.9kg)

STANDARD EYE HOOK MOUNT

SURFACE MOUNT BRACKET

Model D
75W/100W150W

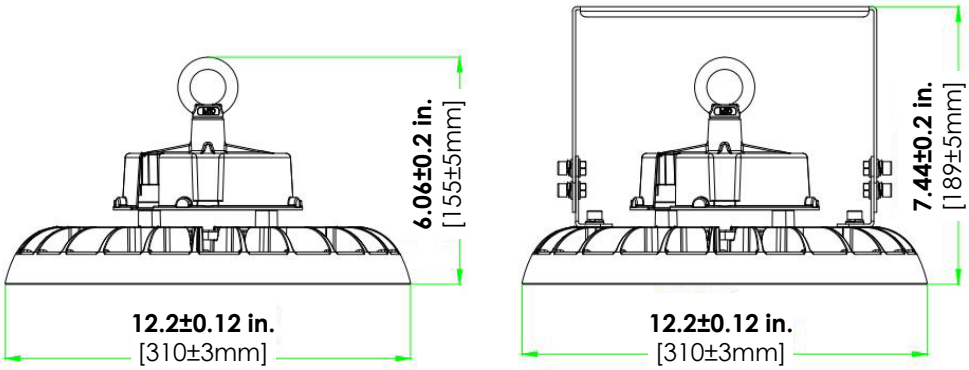

Model E
150W/200W/240W

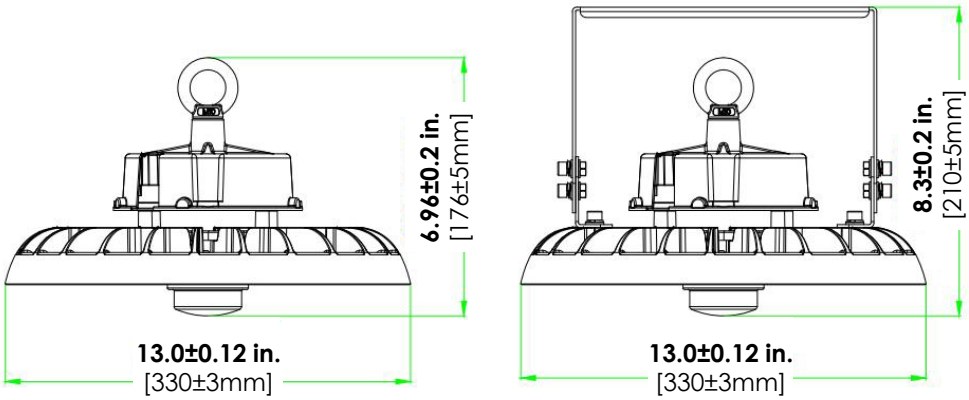

Performance Data

Model	System Level Power	Wattage	Delivered Lumens	Efficacy	CCT	L70 Calculated Lifetime
EBI2-1-UNVL-90-SCCT-D-XX-X	75W	75.0W	10,875.0	145.0 LPW	4000K	149,000 Hours
	100W	100.3W	14,559.5	145.2 LPW	4000K	149,000 Hours
	150W	151.1W	21,510.6	142.4 LPW	4000K	149,000 Hours
EBI2-1-UNVL-90-SCCT-E-XX-X	150W	151.1W	21,510.6	142.4 LPW	4000K	149,000 Hours
	200W	193.2W	27,971.5	144.8 LPW	4000K	149,000 Hours
	240W	239.1W	34,487.5	144.2 LPW	4000K	149,000 Hours

Photometric testing was conducted in accordance with IESNA LM-79 standards by an NVLAP® accredited laboratory.
For more detailed photometric data, please visit www.usled.com or contact our Customer Experience Team at cx@usled.com.

Due to continued product improvements, product specifications are subject to change without notice. Please visit www.usled.com for the most updated product specifications.

ExsaBay® Infinity

Round LED High Bay With Selectable CCT & Wattage

Mounting Accessories

Eye Hook Mount

Standard with fixture for suspended installation with chain (by others).

[34] M10 to 3/4" NPT Adapter

Converts M10 to ¾" NPT For Pendant Mounting

[34JB] M10 to 3/4" NPT Adapter With J-Box

Converts M10 to ¾" NPT For Pendant Mounting With J-Box

[SM] Surface Mount Bracket

Adjustable trunnion bracket provides a surface mounting option in the field.

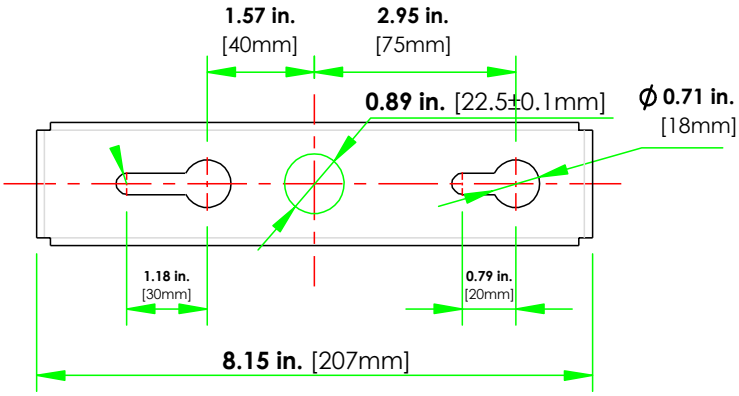

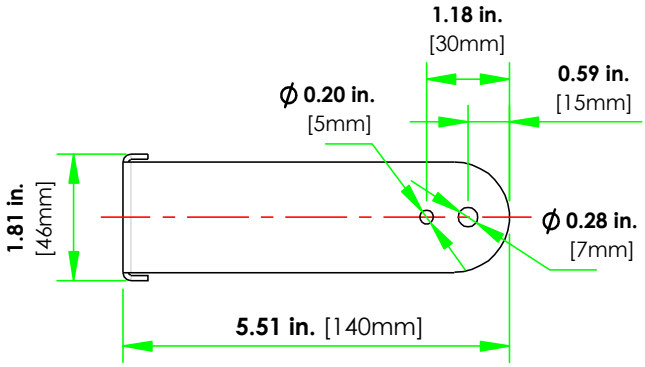

www.usled.com | 866-972-9191 | customerservice@usled.com

Due to continued product improvements, product specifications are subject to change without notice. Please visit www.usled.com for the most updated product specifications.

ExsaBay® Infinity

Round LED High Bay With Selectable CCT & Wattage

USLED
Always the Right Choice!

Other Accessories

[CLR] Clear Polycarbonate Reflector

Reflector Cannot Be Used With
Wire Guard Accessory

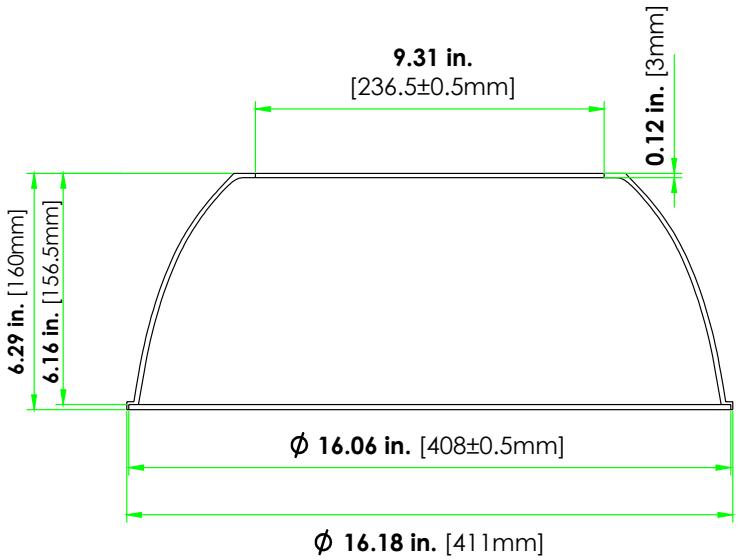

[WG1] Wire Guard For 75-150W Model

[WG2] Wire Guard 150-240W Model

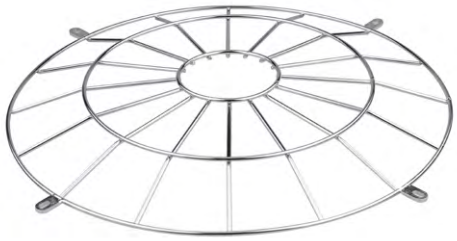

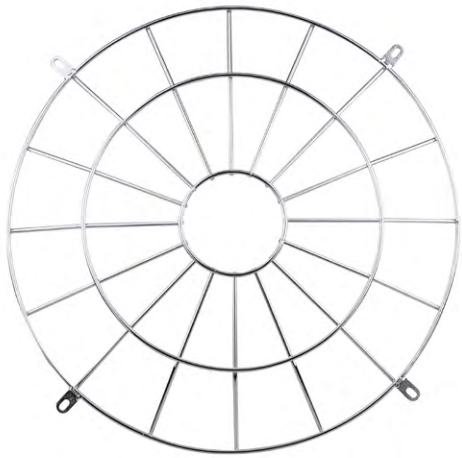

[RC-100] Sensor Remote Control

Required To Use The Daylight
Harvesting Function on Sensors

Due to continued product improvements, product specifications are subject to change without notice. Please visit www.usled.com for the most updated product specifications.

ExsaBay® Infinity

Round LED High Bay With Selectable CCT & Wattage

USLED
Always the Right Choice!

Sensor Accessories

[Y] Bi-Level Microwave Sensor

Daylight Harvesting Function Available Only With RC-100 Remote Accessory

Operating Voltage	12-24V DC
Operating Current	>50mA
Output	DIM 0-10V
Detection Angle	360°
Mounting Height	≤40ft.
Detection Range	Radius, 6-26 ft.
Operating Temperature	-20°C to 60°C (-4°F to 140°F)
IP Rating	IP65

Side View

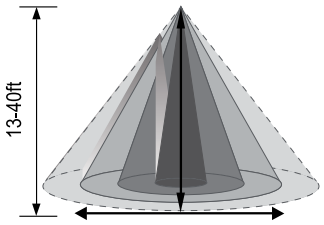

Top View

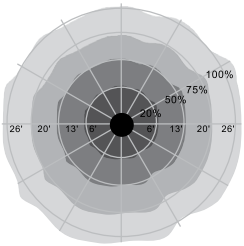

With sufficient natural light, the light does not switch on when presence is detected.

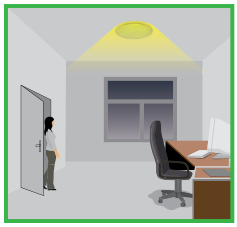

With insufficient natural light, the sensor switches the light on automatically when a person enters the area.

After the hold time, sensor will dim to stand-by level if the available natural light is below the daylight threshold.

Sensor switches off the light automatically after the stand-by period has elapsed.

[D] Bi-Level PIR Sensor With Daylight Harvesting

Daylight Harvesting Function Available Only With RC-100 Remote Accessory

Operating Voltage	12-24V DC
Operating Current	>50mA
Output	DIM 0-10V
Detection Angle	360°
Mounting Height	≤40ft.
Detection Range	Radius, 6-30 ft.
Operating Temperature	-20°C to 60°C (-4°F to 140°F)
IP Rating	IP65

Side View

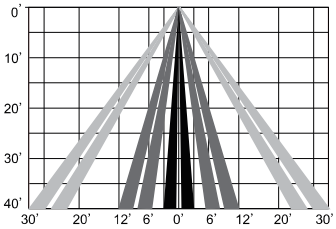

Top View

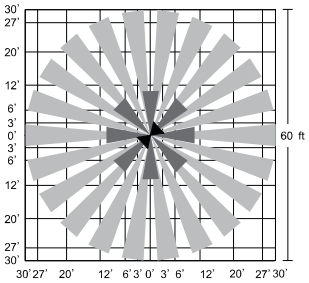

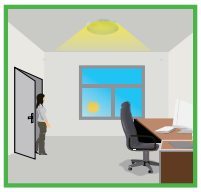

When movement is detected, whether the natural light is sufficient or dark, the light will turn on at 100% brightness.

The light turns on at full or will dim to maintain the light level. The light output will automatically adjust according to the level of natural light available.

The light dims to stand-by period after hold-time and will stay on the selected minimum dimming level.

The light will switch off completely after the stand-by period.

Due to continued product improvements, product specifications are subject to change without notice. Please visit www.usled.com for the most updated product specifications.